Introduction to Electrical Engineering

Experiment 6 **Microphone and Loudspeaker** **Spring 2019**

A. Microphone

The objective of this part of this experiment is to become conversant with a simple Electret microphone (MIC) which is a very commonly encountered source of an audio signal.

An Electret microphone has a parallel-plate capacitor having one fixed plate and one plate mounted on a diaphragm that can vibrate according to the incident sound waves. It works on the basic principle that the current through a capacitor is given by $i_C = d(CV_C)/dt$ in general. In an Electret microphone, V_C is a constant voltage and C varies in accordance with the vibrations of the diaphragm, resulting in an a-c current $i_C = V_C\, dC/dt$ will flow through the capacitor.

1. Set up the circuit for the given Electret microphone as given in **Fig. 6.1,** and measure the **d-c** bias voltage V_B across the Microphone using a multimeter. Display the **a-c** output voltage v_o generated by the circuit on DSO Channel 1.
2. Speak into the microphone and see **your voiceprint** on the screen for different **vowel sounds**. True **vowel sounds** are those which can be sustained as long as one can without any change in the shape of the mouth. These sounds are not specific to any language, and so should not be confused with the vowels ***a***, ***e***, ***i***, ***o***, ***u*** of the English alphabet. Adjust the Time Base to display 2-3 periods of each **vowel** sound. Freeze the display on the DSO using the Run/Stop button and sketch the voiceprints of all the **vowel** sounds you can generate.
3. Find out the minimum and maximum frequencies that your voice signal contains by examining the waveforms for **all** the vowel sounds. Note the range of the peak-to-peak value of the microphone output voltage obtained with the different waveforms observed by you.

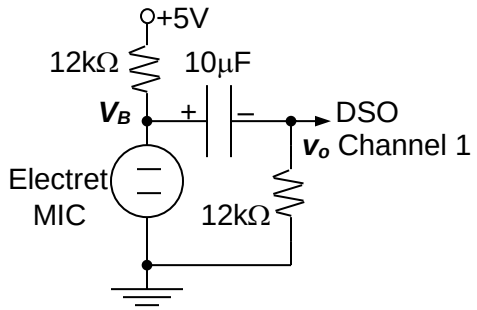

Fig. 6.1 Electret Microphone Biasing Circuit

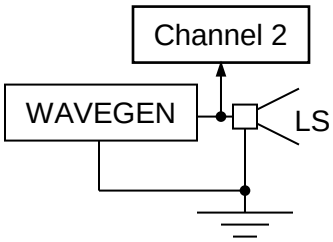

Fig. 6.2 Loudspeaker Testing Circuit

B. Loudspeaker

1. Connect the WAVEGEN output to the given loudspeaker (LS) and also to a DSO Channel 2, as shown in **Fig. 6.2**, and set the WAVEGEN for a sinusoidal output with peak-to-peak value 5V.
2. Vary the WAVEGEN frequency slowly over the entire audio frequency range from 20Hz to 20kHz, and note the frequency range over which **your ear** can hear the sound from the loudspeaker.
3. Set the frequency at a suitable value in the 1-2 kHz range so as to get the maximum sound from the loudspeaker, and measure the peak-to-peak value of the voltage across the loudspeaker as displayed on the DSO. Note that this value is much lower than 5V, the setting of the WAVEGEN.
4. Disconnect the loudspeaker and measure the peak-to-peak value of the voltage displayed on the DSO. Note that this value is now as expected from the WAVEGEN settings.
5. Recognise that the loudspeaker “loads” the WAVEGEN output, and determine the impedance of the loudspeaker from the ratio of the voltage readings at steps **B.3** and **B.4** using Voltage Division, given that the WAVEGEN has an internal resistance 50Ω.
6. Measure the resistance of the loudspeaker with a multimeter and compare this value with the value calculated for the loudspeaker impedance in step **B.5**.